One zone dim remote

SR-2833K1

Feature

This is a RF Wireless Push Remote,can be wall mounted, or sticked on wall easily by 3M glue.

Parameter

Remote

Part No.	Operation Voltage	Operation Frequency	Remarks
SR-2833K1	3VDC,CR2430 battery	434MHz/868MHz	RF Wireless

Receiver

Part No.	Iuput Voltage	Current	Output	Remarks
SR-1009FA	12-36VDC	4x5A	4x(60-180)W	Constant voltage
SR-1009EA	12-36VDC	4x8A	4x(96-288)W	Constant voltage
SR-1009FA3	12-36VDC	4x350mA	4x(4.2-12.6)W	Constant current
SR-1009FA7	12-36VDC	4x700mA	4x(8.4-25.2)W	Constant current

Product Size

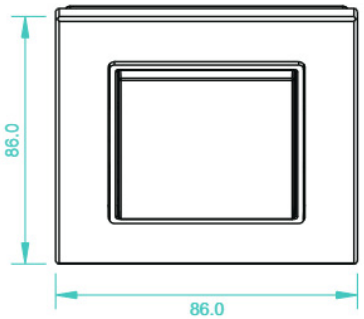

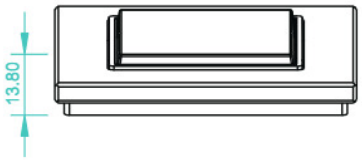

Installation

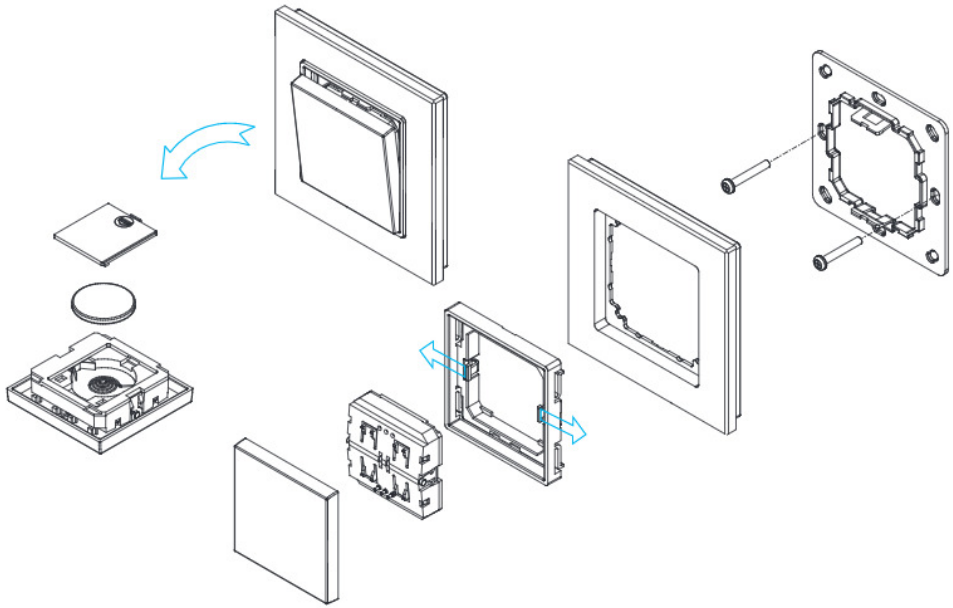

Wiring diagram

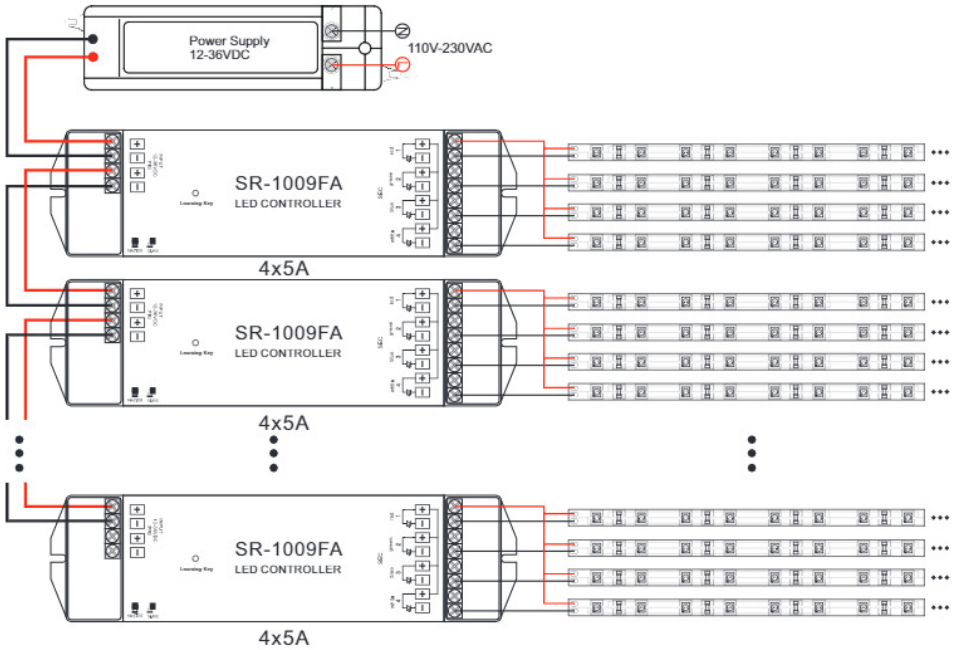

Mounting

The key part of this controller is a universal, extremely rotary standard switch element that can be integrated in numerous frames by different manufactures as below list:

BEKER	S1, B1, B3, B7 glass
GIRA	Standard55, E2, Event, Esprit
JUNG	A500, Aplus
MERTEN	M-smart, M-Arc, M-Plan

Operation

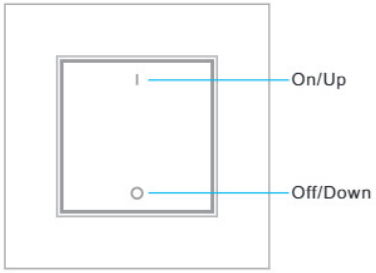

1. Pairing with remote: connect well receiver, press learning key on receiver,then immediately push I or ○ ,the led will flash, means well paired. One remote can pair with endless of receivers, to control in sync.

2. Short press I for ON,long press for turn Up brightness.
   short press○ for OFF, long press for turn Down brightness.

3. If you want delete the receiver's learning data, just long press for 5 seconds the learning key on receiver, the receiver will be deleted the learning, be set as factory defaults.

Safety & Warnings

1) The product shall be installed and serviced by a qualified person.
2) IP20.Please avoid the sun and rain. When installed outdoors, please ensure it is mounted in a water proof enclosure.
3) Always be sure to mount this unit in an area with proper ventilation to avoid overheating.
4) Please check if the output voltage of any LED power supplies used comply with the working voltage of the product.
5) Never connect any cables while power is on and always assure correct connections to avoid short circuits before switching on.
6) Please ensure that the cable is secured tightly in the connector
7) For update information please consult your supplier.

Warranty Agreement

1) We provide lifelong technical assistance with this product:
- 3-year warranty. We print date on every products, for example :1125 means year 2011,week 25.The warranty is for free repair or replacement and covers manufacturing faults only.
- For faults beyond the 3-year warranty we reserve the right to charge for time and parts.

2) Limited Warrenty
- Any defects caused by wrong operation.
- Any damages caused by unauthorized removal, maintenance, modifying, incorrect connection and replacement of chips.
- Any damages due to transportation, vibration etc. after purchase.
- Any damages caused by earthquake, fire, lightning, pollution and abnormal voltage.
- Any damages caused by negligence, inappropriate storing at high temperatures and humidity or near harmful chemicals.
- Product has been updated

3) Repair or replacement as provided under this warranty is the exclusive remedy to the customer.