emuca
where creation begins

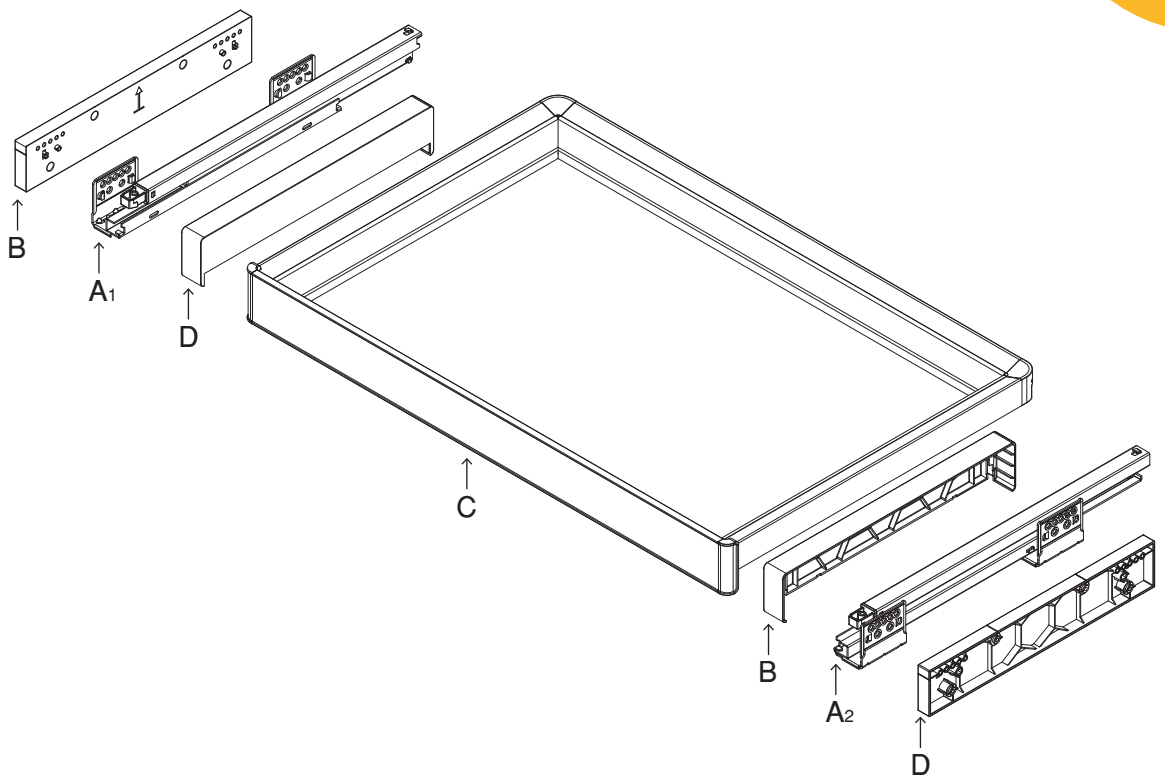

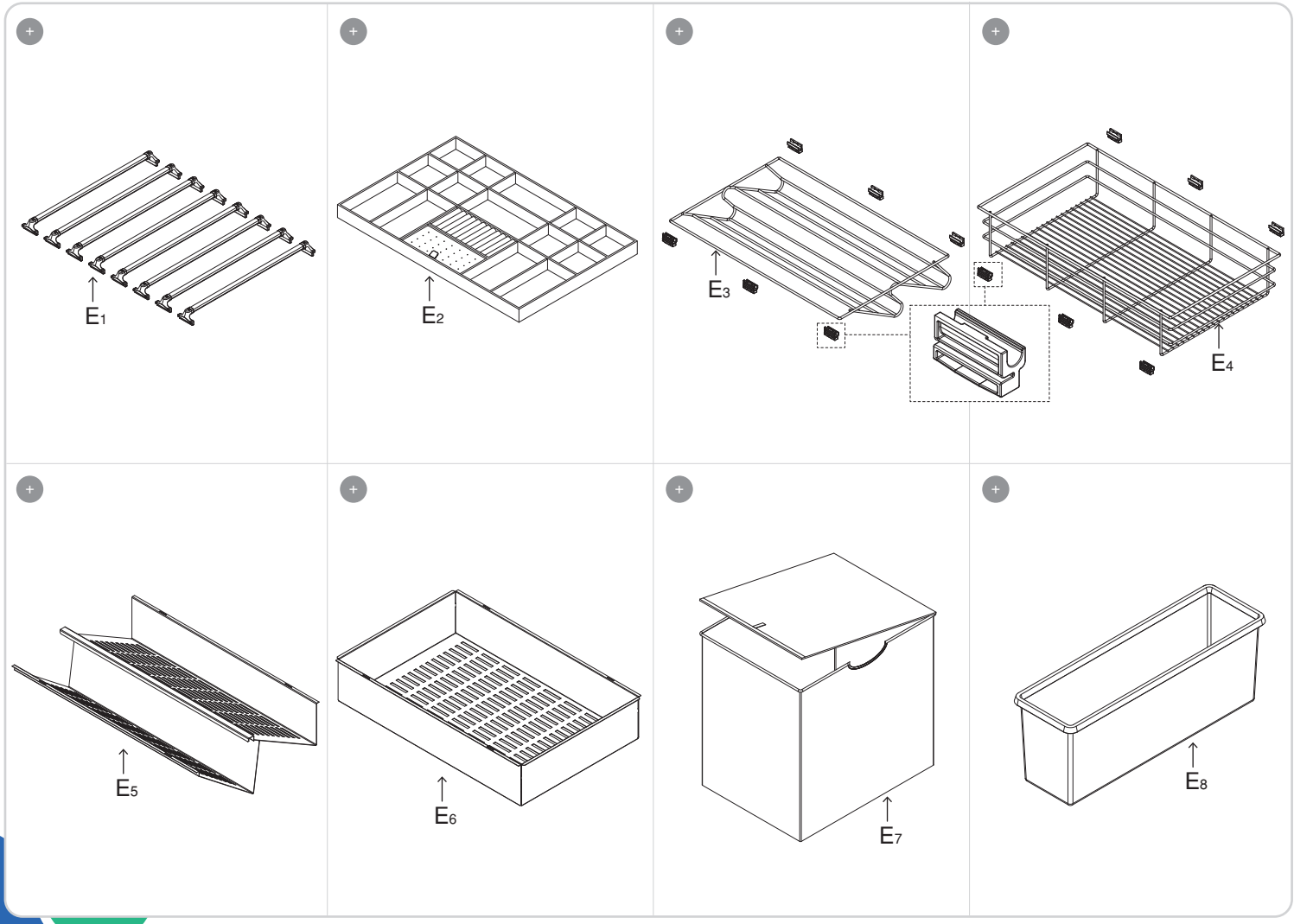
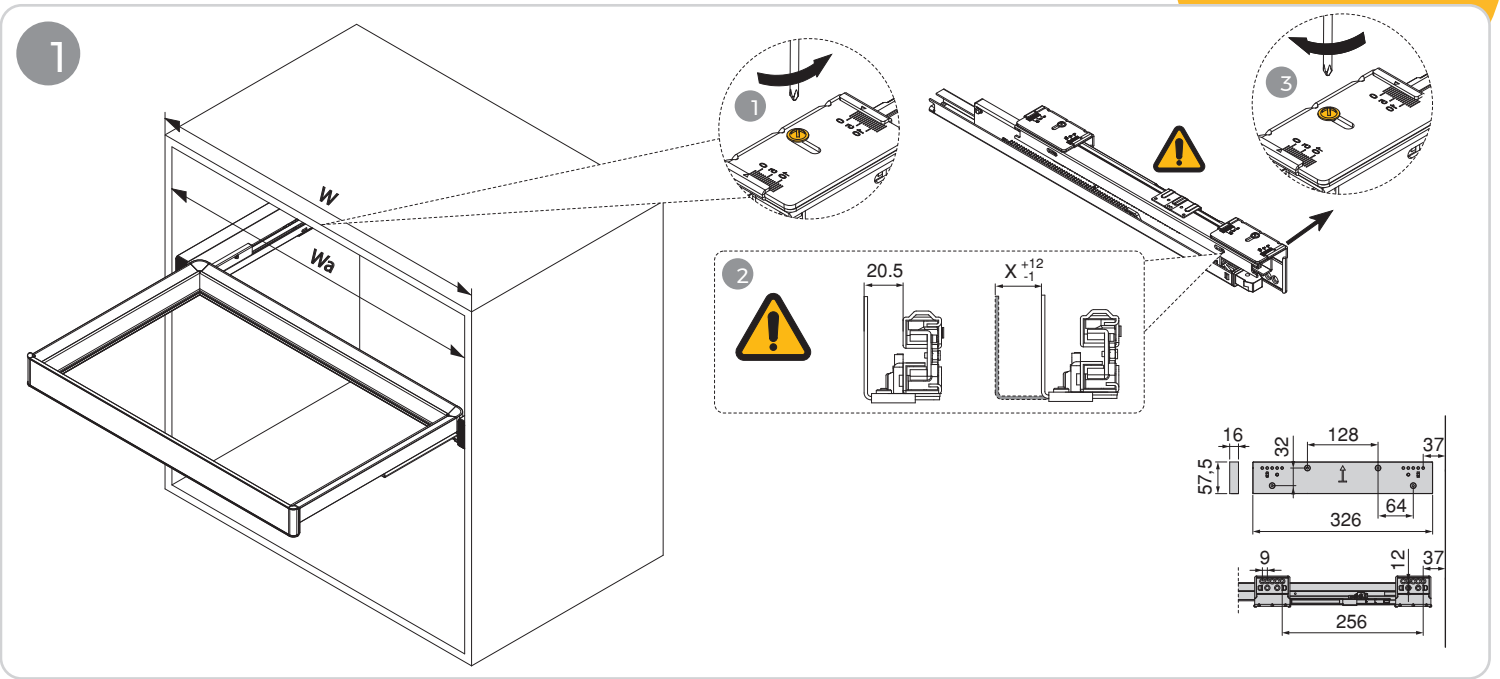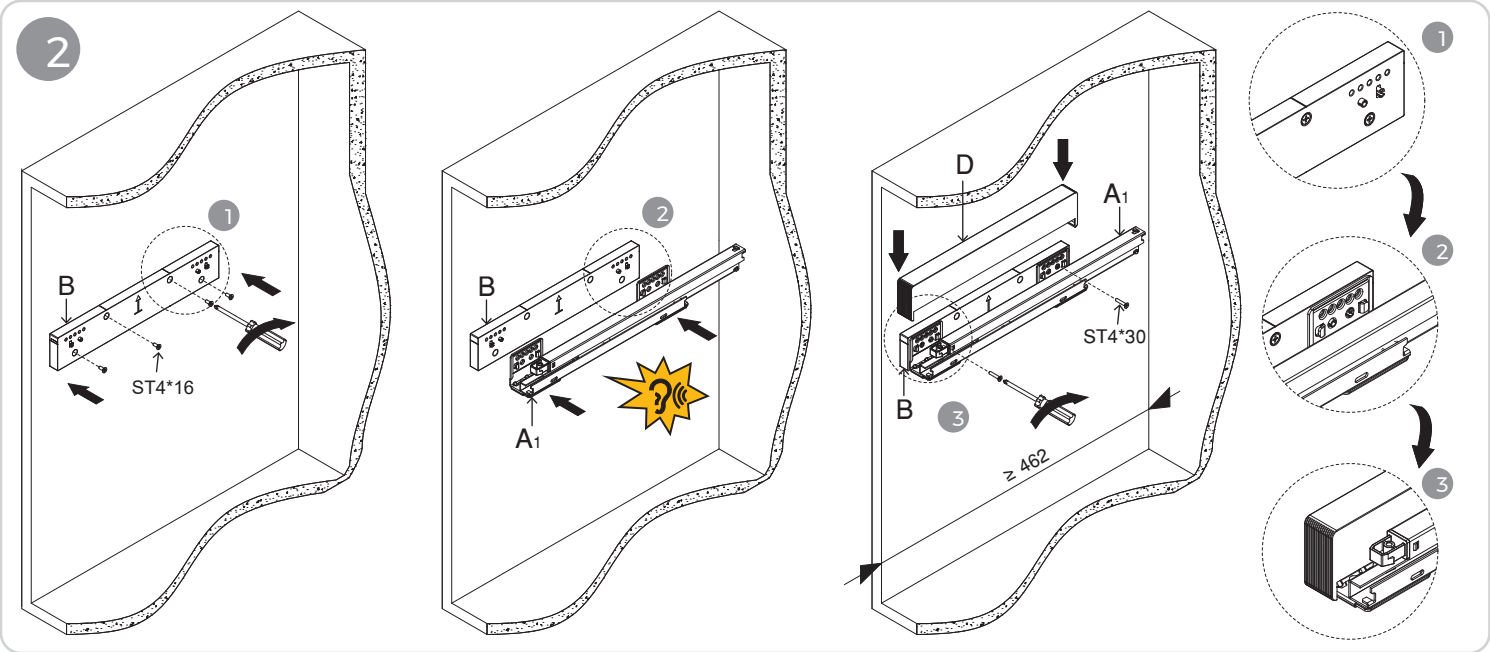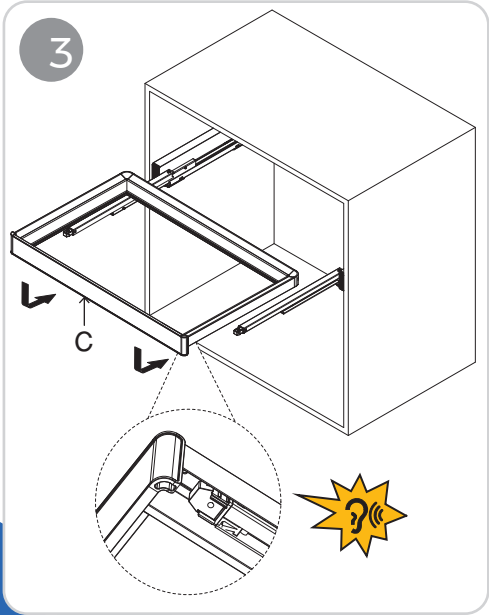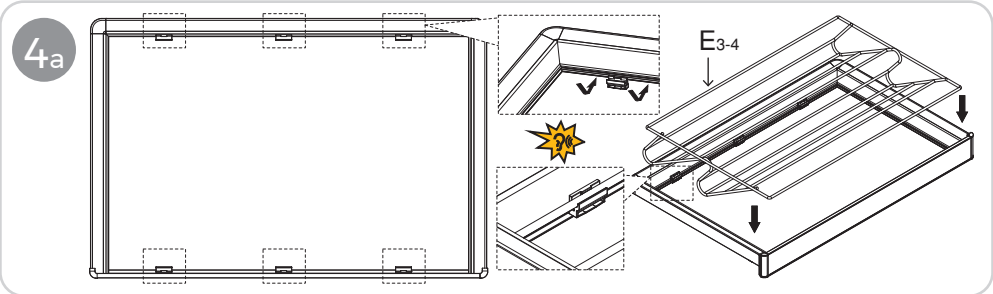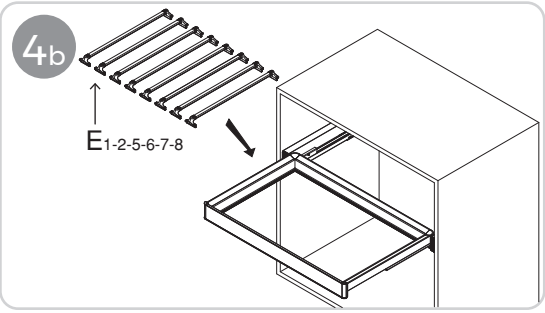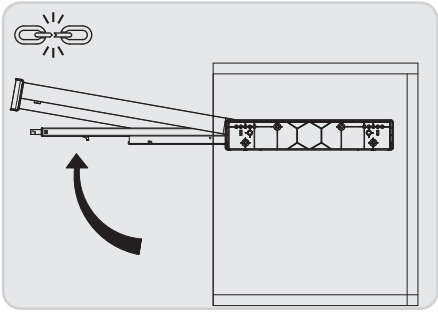
emuca
where creation begins