HARMONY SWIVEL LARDER UNIT

Applicative Width	Specification w*d*h(mm)	Tier
400	340*480*(1780-2080)	6
400	340*480*(1430-1730)	5

Accessory List:

A: top slide
B: bottom slide
C: joint parts to door
D: main frame
E: 4x40 wood screw (3X)
F: plastic hook（five layers is 10X,six layers is 12X）
G: baskets（five layers is 5X,six layers is 6X)
H: Plastic clip spring (1X)
I: 4x16 wood screw (6X)
J: 5x18 wood screw (13X)

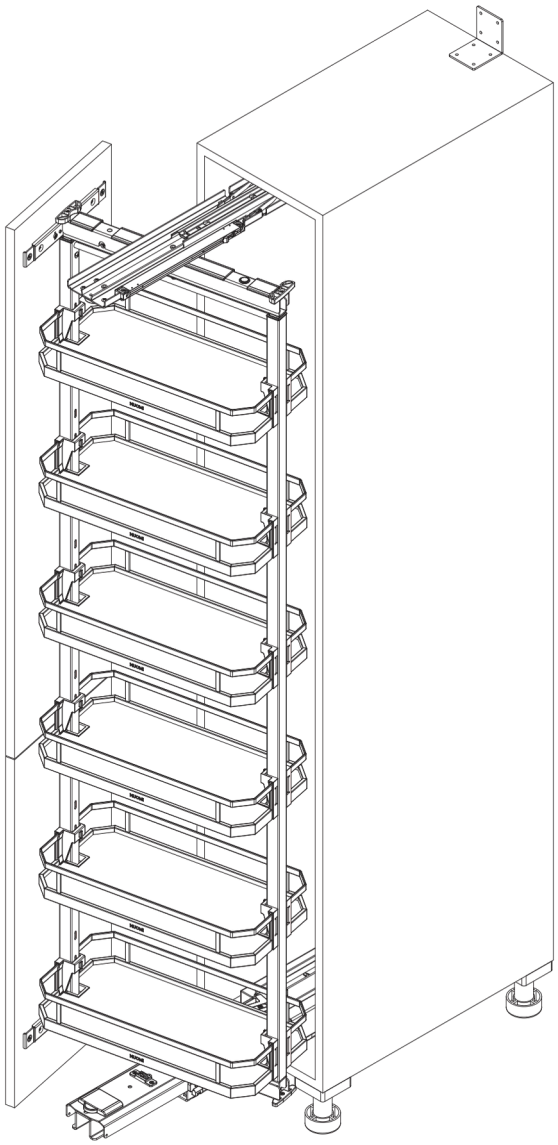

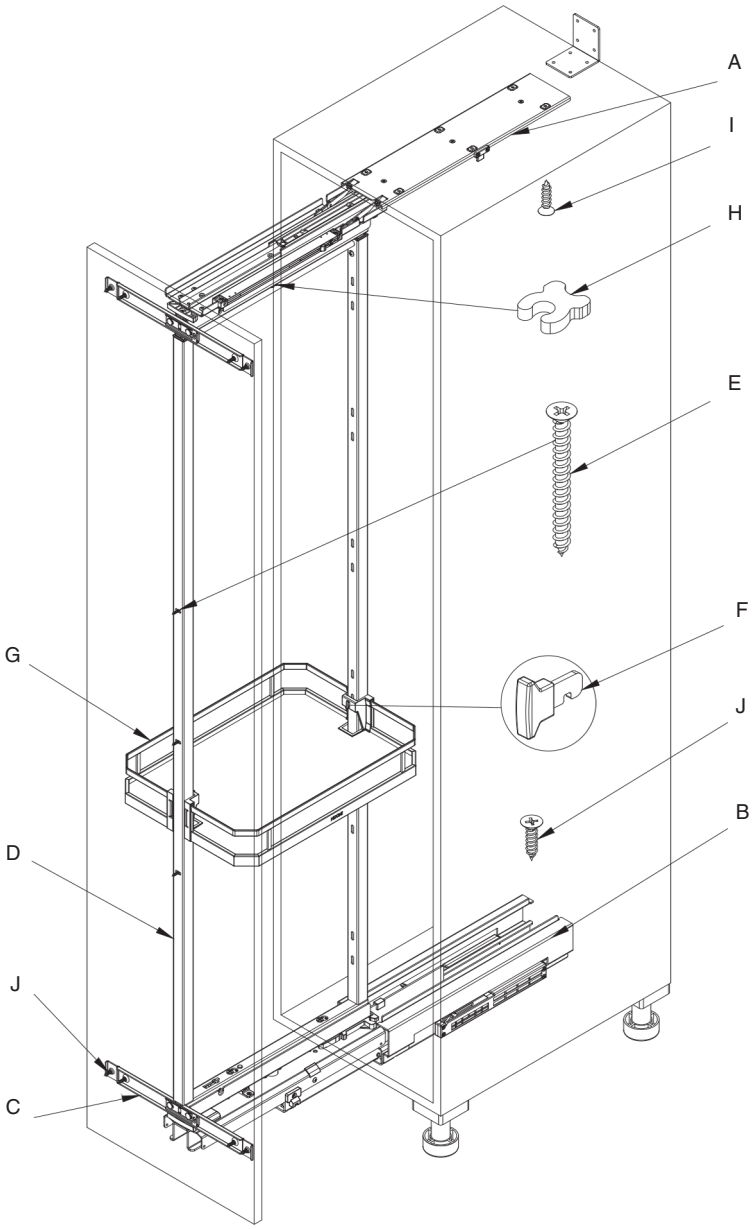

HARMONY SWIVEL LARDER UNIT

1.Fix the top slide (A) by using

6pcs screw I to fix up

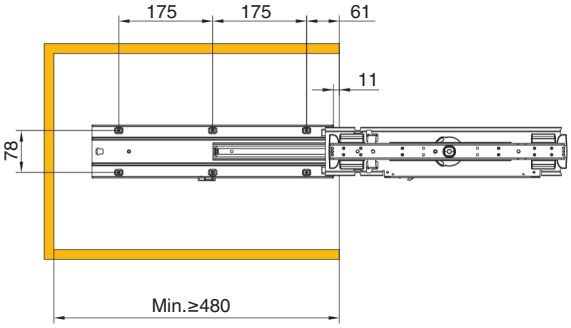

2.Fix the bottom slide (B) by using

5 pcs screw J to fix up

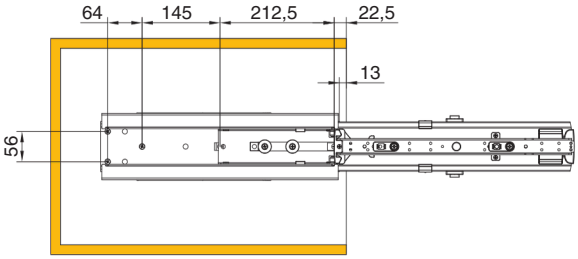

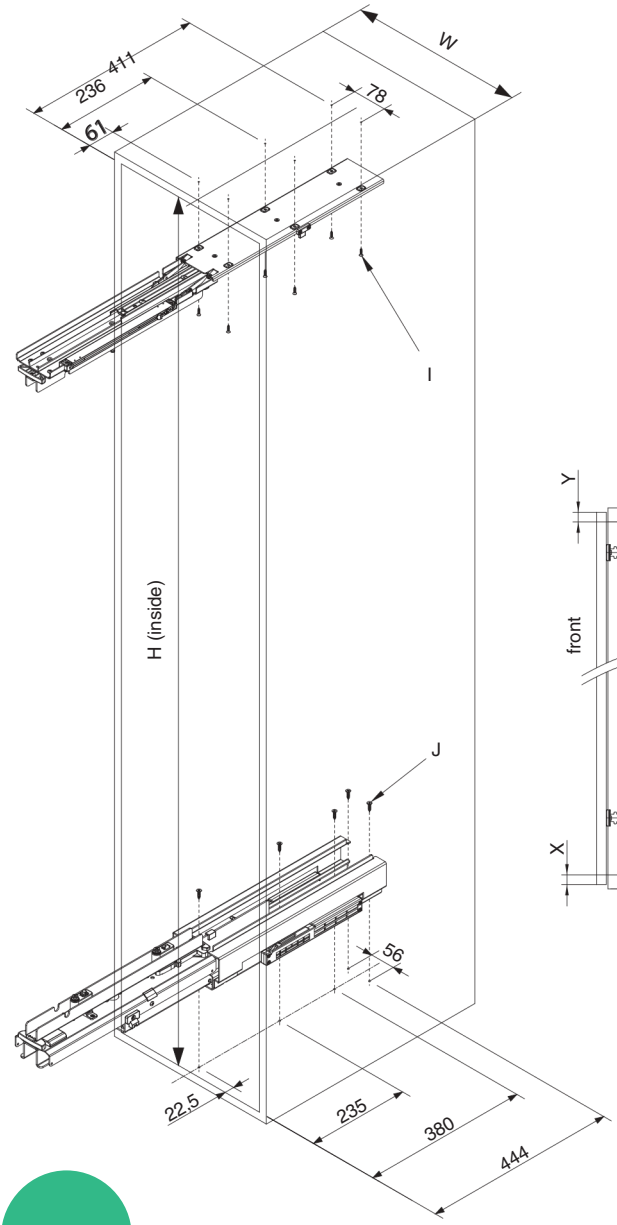

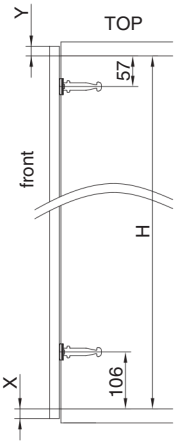

3.Fix jonit parts to door sheet (C)

by using 8 pcs screw J

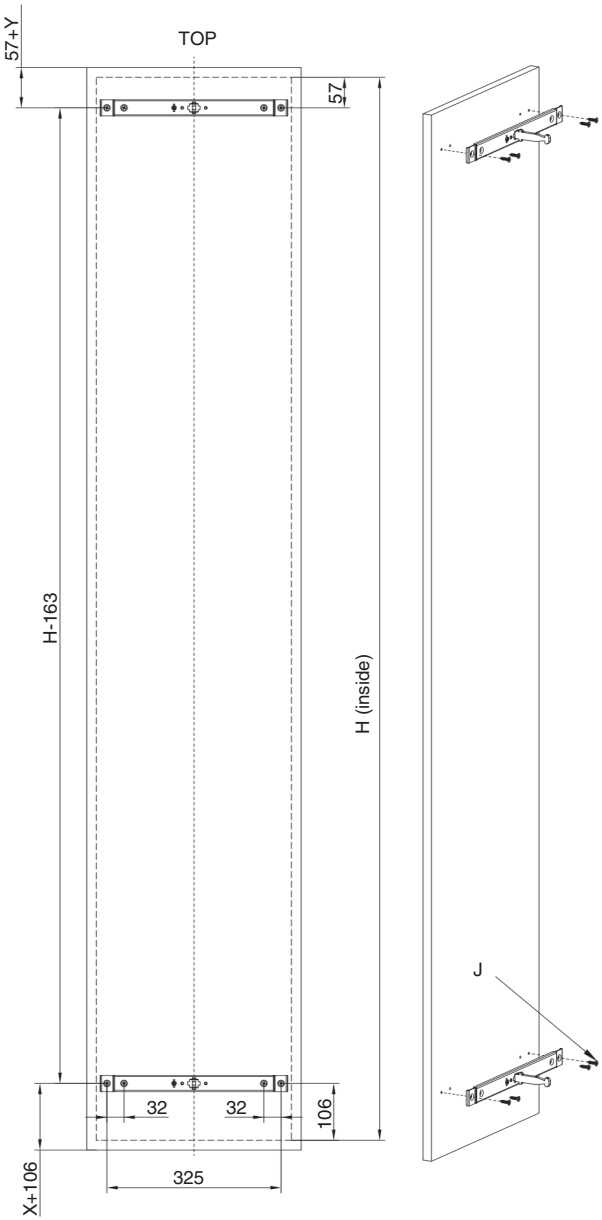

4.Fix main frame(D)

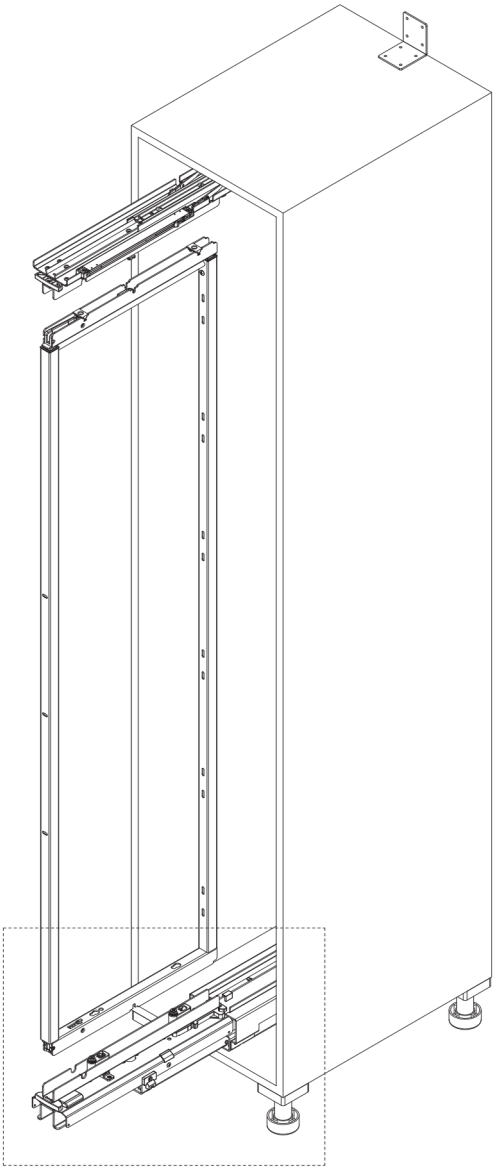

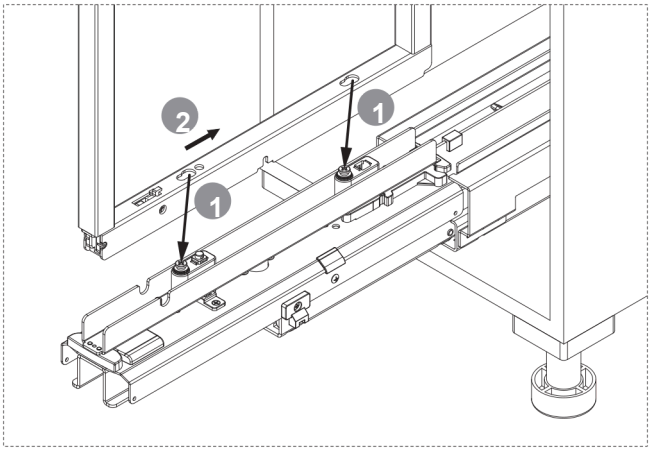

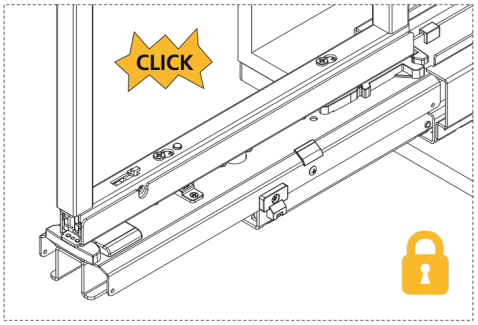

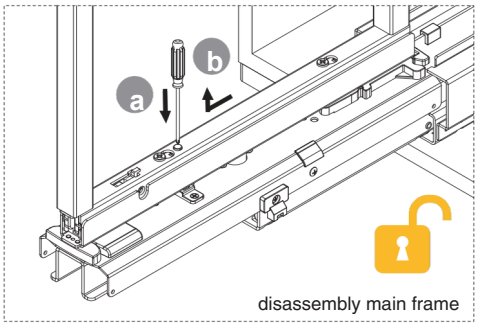

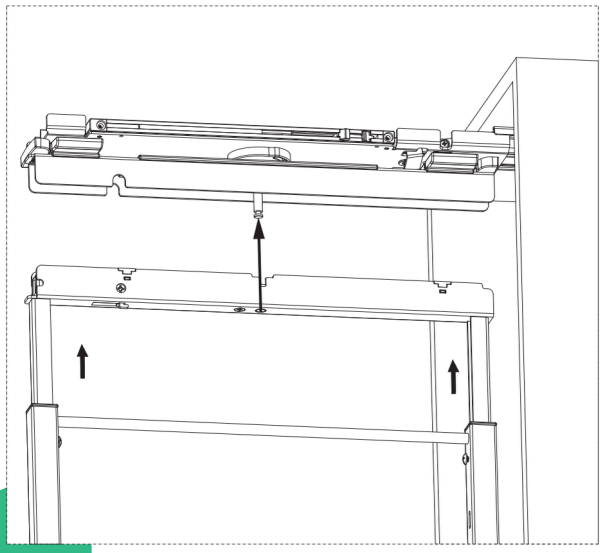

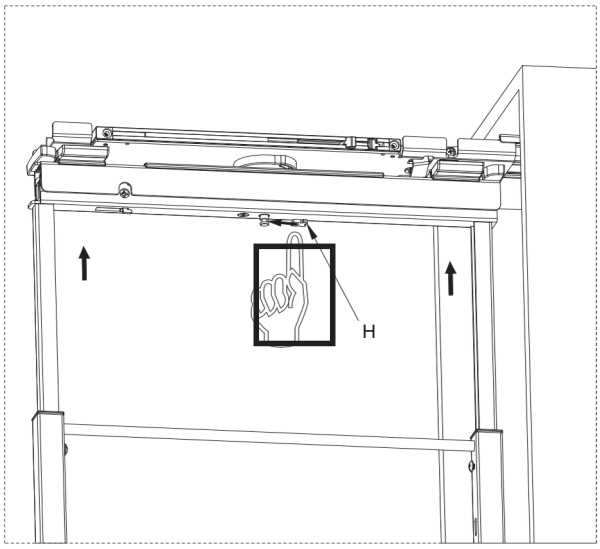

HARMONY SWIVEL LARDER UNIT

5、Fix the jonit parts to door sheet

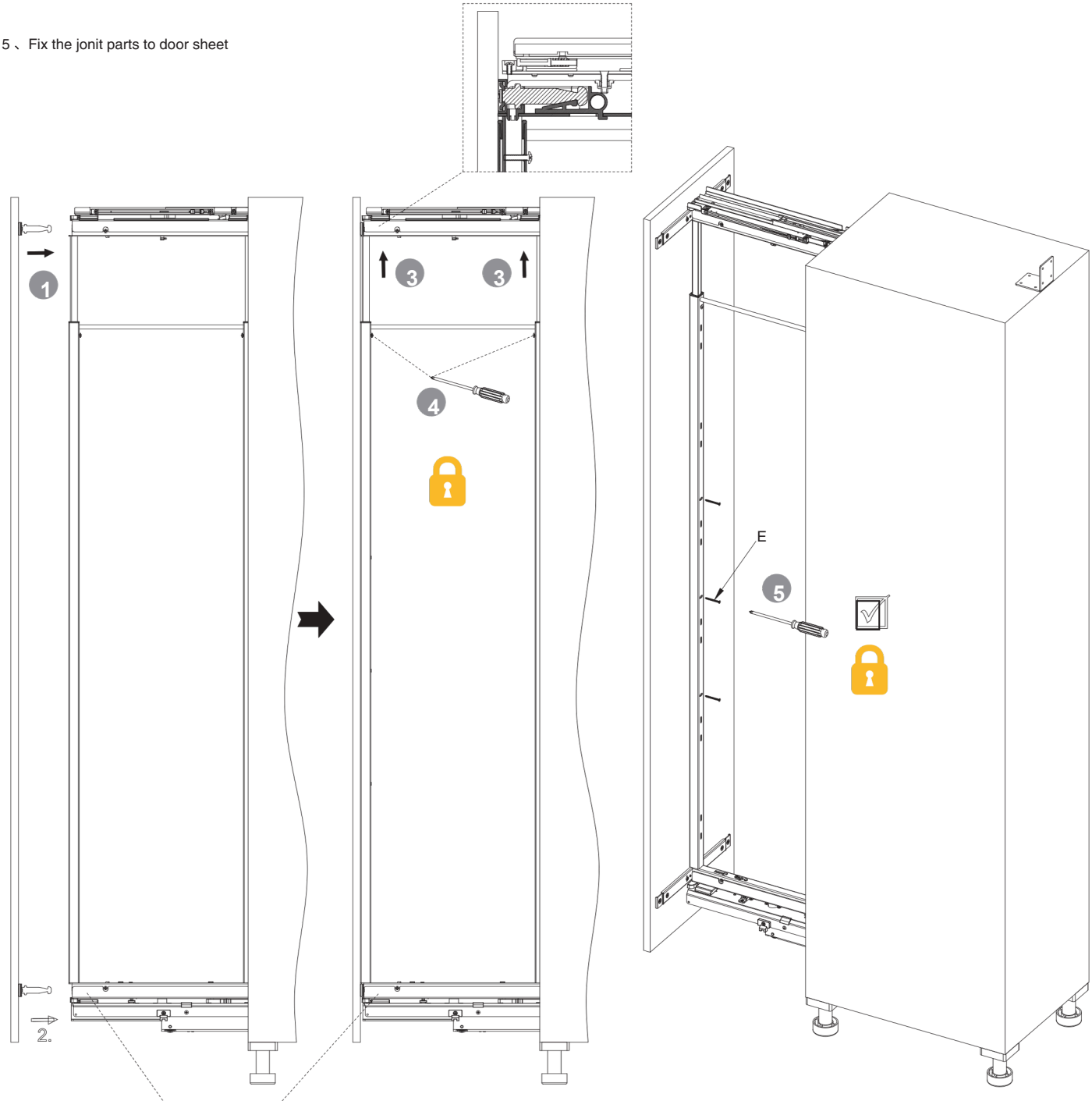

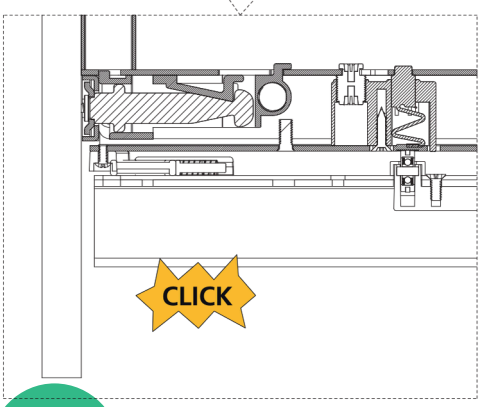

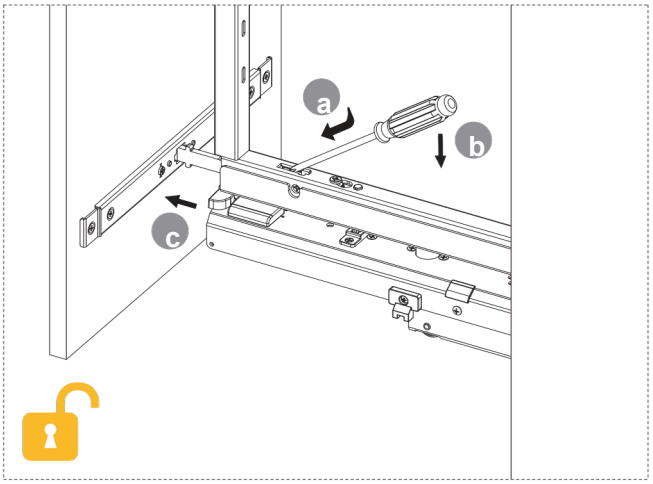

6.Adjusting the door panel

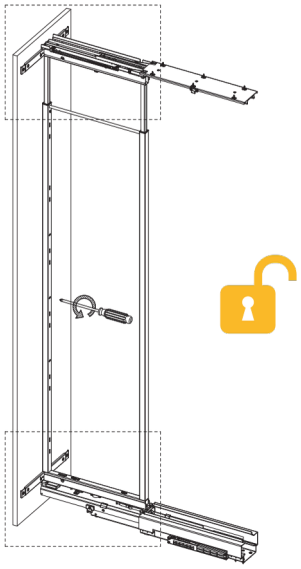

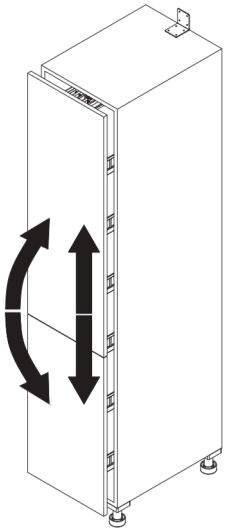

1

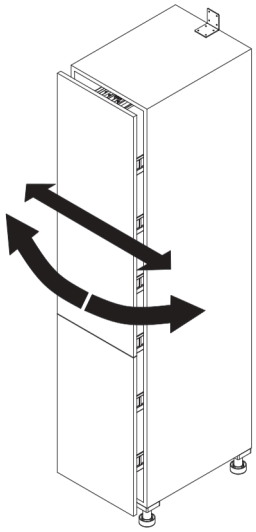

2

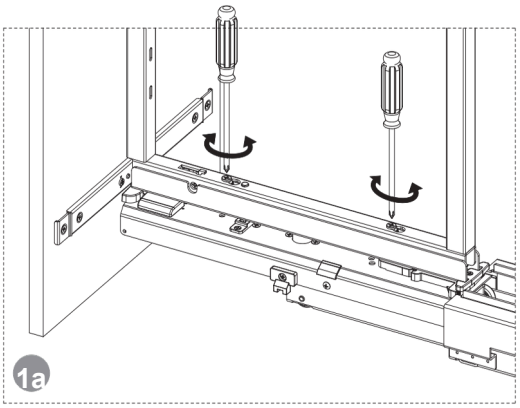

1a

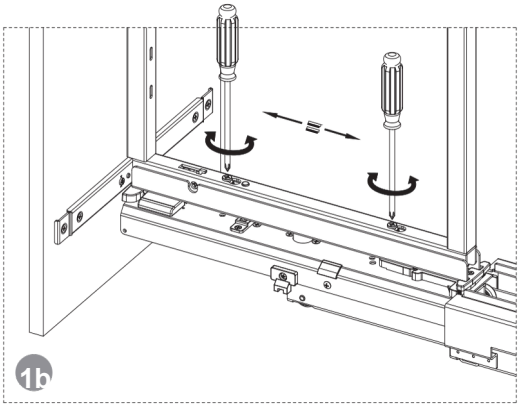

1b

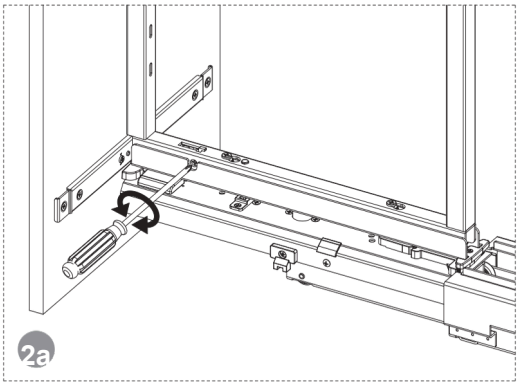

2a

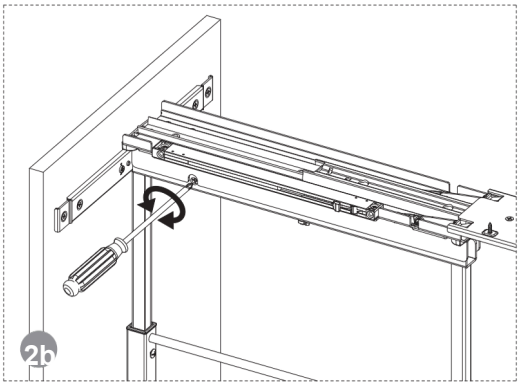

2b

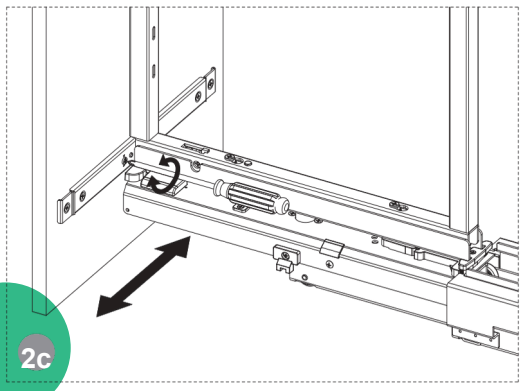

2c

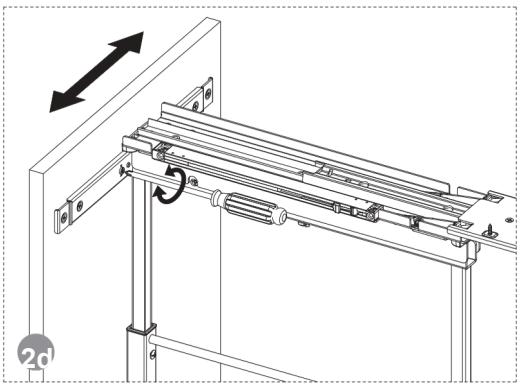

2d

HARMONY SWIVEL LARDER UNIT

7.Fix the baskets

8.Finish instruction
Note:Disassembly is carried out in reverse steps.

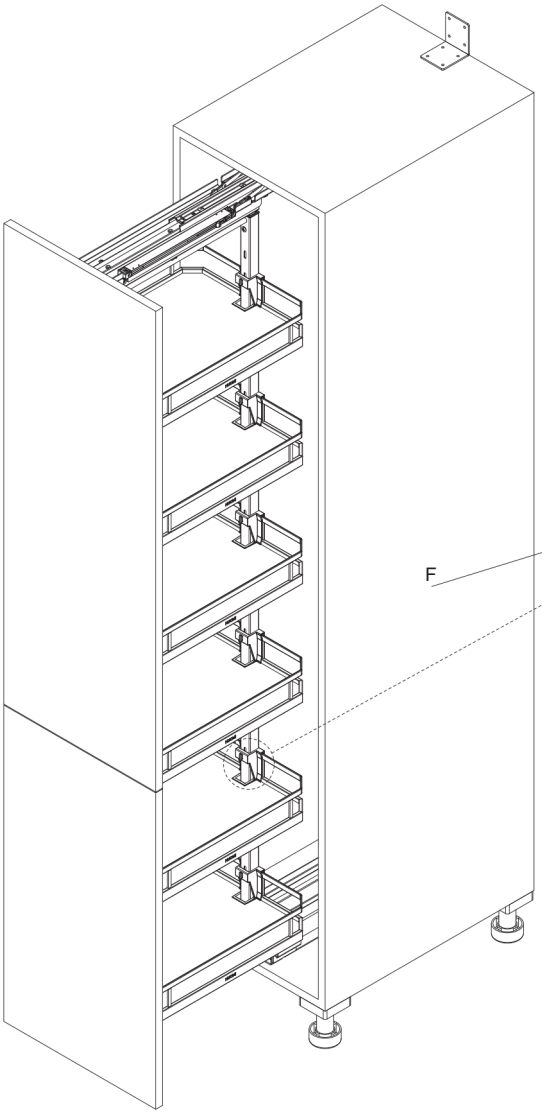

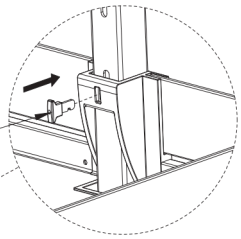

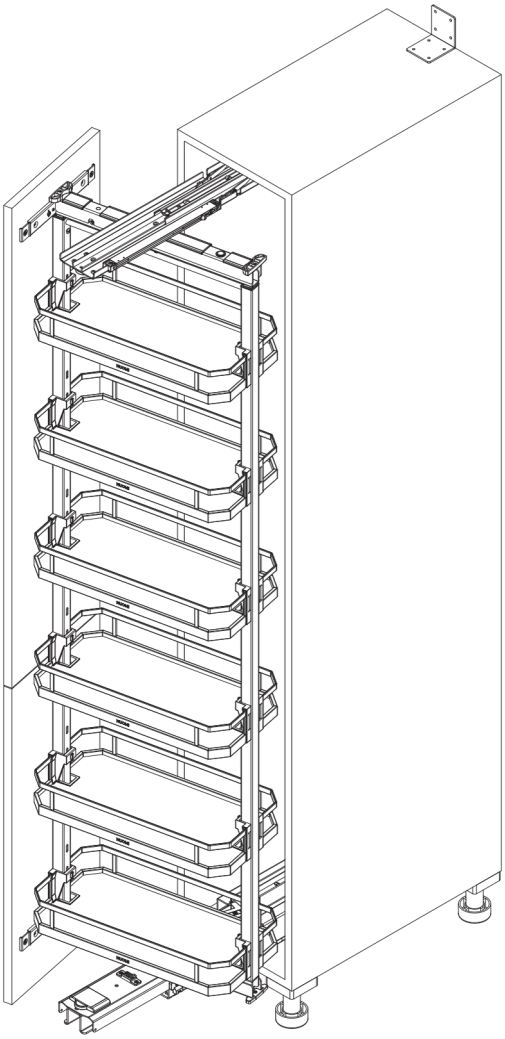

Left rotation

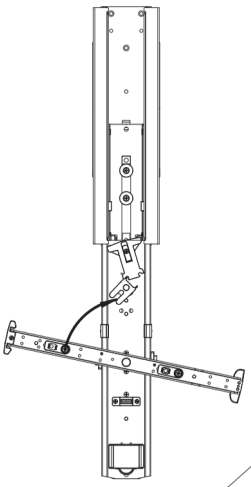

The incorrect state of the pendulum block

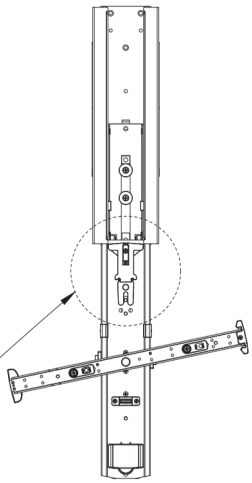

Right rotation

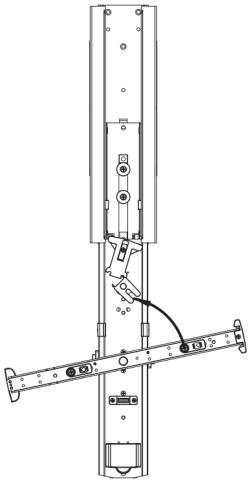

Note: When the pendulum block is in an incorrect state after rotate of the main frame, the pendulum block should be turned to the state of left rotation or right rotation (as shown in the picture), otherwise the main frame cannot to be normal.